CITY OF VILLA PARK
BUILDING DEPARTMENT

SECOND STORY DECK STANDARD

CZ 2/26/92

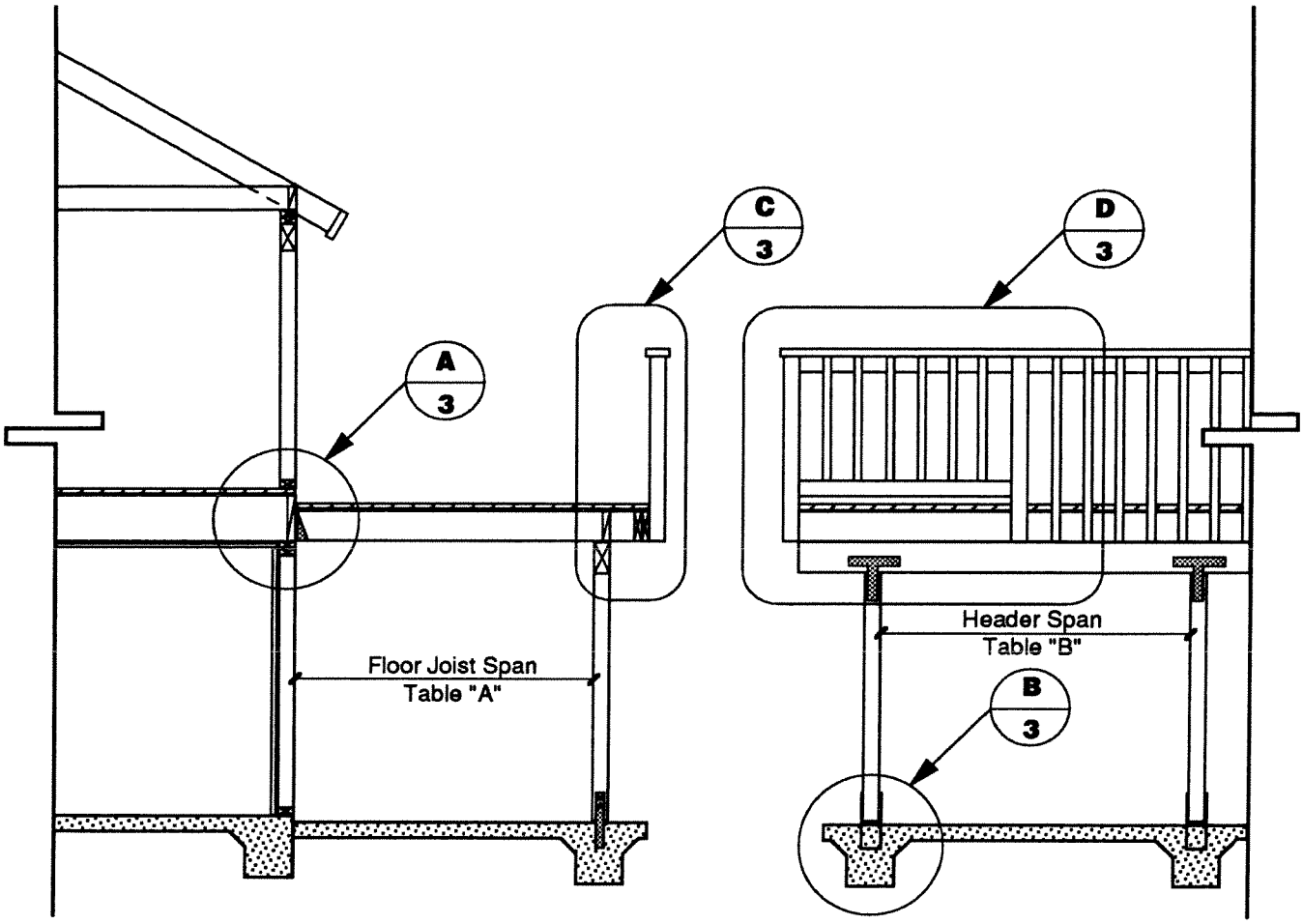

SECTION **ELEVATION**

CITY OF VILLA PARK
BUILDING DEPARTMENT

SECOND STORY DECK STANDARD

CZ 2/26/92

TABLE "A" : Floor Joist Span Table

Floor Joist "Size"	Floor Joist "Spacing"	Floor Joist "Span"	Floor Joist "Size"	Floor Joist "Spacing"	Floor Joist "Span"
2 X 6	12" o.c.	10' - 6"	4 X 4	24" o.c.	6' - 0"
	16" o.c.	9' - 2"		32" o.c.	6' - 0"
	24" o.c.	7' - 6"		48" o.c.	5' - 0"
2 X 8	12" o.c.	14' - 0"	4 X 6	24" o.c.	10' - 0"
	16" o.c.	12' - 0"		36" o.c.	9' - 0"
	24" o.c.	9' - 8"		48" o.c.	8' - 0"
	32" o.c.	9' - 0"	4 X 8	24" o.c.	14' - 0"
	36" o.c.	8' - 0"		36" o.c.	12' - 0"
2 X 10	16" o.c	15' - 5"		48" o.c.	10' - 0"
	24" o.c.	13' - 6"	4 X 10	36" o.c.	15' - 0"
	36" o.c.	10' -- 0"		48" o.c.	13' - 6"
	48" o.c.	8' - 10"			
2 X 12	24" o.c.	16' - 4"			
	32" o.c.	13' - 0"			
	36" o.c.	12' - 4"			
	48" o.c.	10' - 9"			
2 X 14	24" o.c.	19' - 3"			
	32" o.c.	15' - 6"			
	36" o.c.	14' - 8"			

TABLE "B" : Header Span (2'-0" Overhang)

Floor Joist "Span"	Header "Size"	Header "Span"	Footing "Size"
6' - 0"	4 X 6	6' - 0"	12" sq. X 18" deep
	4 X 8	9' - 0"	15" sq. X 18" deep
	4 X 10	10' - 0"	17" sq. X 18" deep
8' - 0"	4 X 8	9' - 0"	15" sq. X 18" deep
	4 X 10	10' - 0"	17" sq. X 18" deep
	6 X 8	11' - 0"	17" sq. X 18" deep
	6 X 10	14' - 0"	20" sq. X 18" deep
	6 X 12	16' - 0"	21" sq. X 18" deep
10' - 0"	4 X 8	7' - 0"	16" sq. X 18" deep
	4 X 10	9' - 0"	18" sq. X 18" deep
	4 X 12	11' - 0"	20" sq. X 18" deep
	6 X 8	10' - 0"	19" sq. X 18" deep
	6 X 10	12' - 0"	21" sq. X 18" deep
12' - 0"	4 X 8	7' - 0"	24" sq. X 18" deep
	4 X 10	8' - 0"	28" sq. X 18" deep
	4 X 12	10' - 0"	28" sq. X 18" deep
	6 X 10	11' - 0"	21" sq. X 18" deep
	6 X 12	13' - 6"	24" sq. X 18" deep
14' - 0"	4 X 10	7' - 0"	20" sq. X 18" deep
	4 X 12	8' - 0"	21" sq. X 18" deep
	4 X 14	10' - 0"	24" sq. X 18" deep
	6 X 14	12' - 0"	26" sq. X 18" deep
16' - 0"	4 X 10	8' - 0"	18" sq. X 18" deep
	4 X 12	10' - 0"	20" sq. X 18" deep
	4 X 14	13' - 0"	24" sq. X 18" deep

TABLE "C" : Ledger Bolting

Ledger Bolts - (3/8" X 5" long) Staggered

Floor Joist "Span"	Ledger Bolts "Spacing"
8' - 0"	8" o.c.
10' - 0"	7" o.c.
12' - 0"	6" o.c.
14' - 0"	5" o.c.
16' - 0"	4" o.c.

NOTES :

1. Live load design 60 p.s.f.
2. Metal hangers & connectors to be **"Simpson Strong Tie"** or approved equal.
3. Footing design 1000 p.s.f. max. soil pressure. carry footings 12" min. into natural grade.
4. Concrete to be 2000 p.s.i. @ 28 days.
5. Lumber to be Douglas Fir No. 2 or better.
6. All lag bolts shall have pre-drilled pilot holes.
7. Homes with 2nd story cantilever projections do not apply to these standards and shall contact a California Registered Professional Engineer.

CITY OF VILLA PARK
BUILDING DEPARTMENT

SECOND STORY DECK STANDARD

CZ 2/26/92

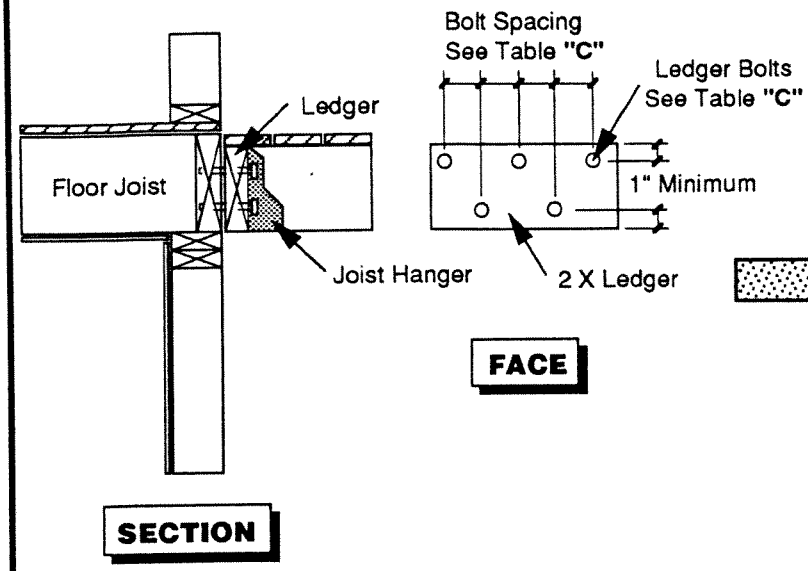

A/3 LEDGER DETAILS

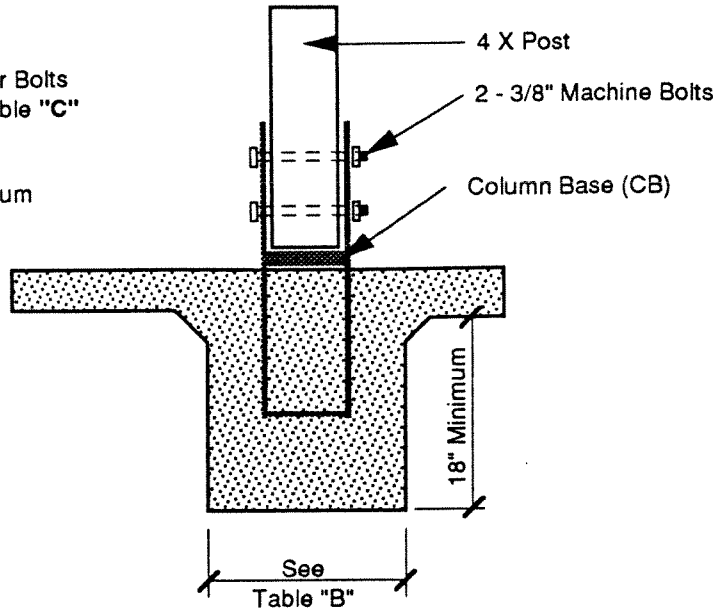

B/3 POST BASE FOOTING DETAIL

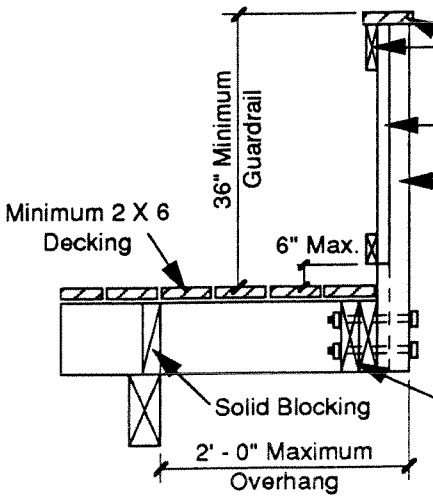

C/3 RAILING SECTION

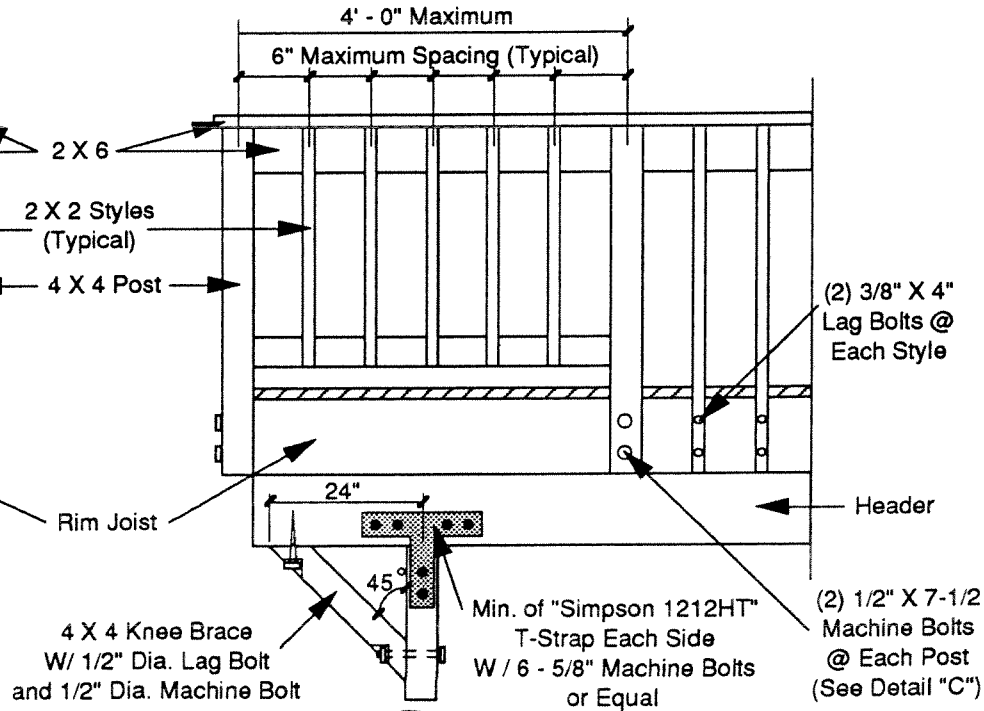

D/3 RAILING / POST & BEAM CONNECTION