CITY OF VILLA PARK
BUILDING DEPARTMENT

TYPICAL PATIO COVERS

PLEASE NOTE: *This information Bulletin is made available to assist you in preparing for obtaining permits. These standards are currently being formulated by the Building Inspection Department and are not yet final. Changes, including additions to this list, may be made at any time and without notice. For information on current permit standards, please call the City of Villa Park at (714) 998-1500.*

I. DEFINITION

Patio covers are one-story, roofed structures not more than 12 feet above grade and used only for recreational or outdoor living purposes.

Patio covers must be open on one or more sides for a clear height of not less than 6'-8" from floor to soffit of supporting members. The open side(s) must not be covered with any permanent materials which obstruct the free passage of light and air except insect screening having mesh not finer than 16" X 16", or readily removable transparent flexible plastic screening of 20 mil maximum thickness.

If two sides are open, the open sides may be partially enclosed by solid walls which do not exceed 30 inches in height above the floor, in addition to the screening *(see drawings in this Information Bulletin)*. However, when required windows from adjoining rooms open into a patio cover, open area equivalent to the requirements of Appendix Section 4901 of the Uniform Building Code must apply.

Patio covers may be attached or detached, and permitted only as accessory to single-family dwellings or to individual dwelling units in multi-dwelling-unit buildings. Patio covers cannot be used as carports, garages, habitable rooms or storage structures.

II. CONCRETE MIX

The concrete mix for footings must meet the strength of F'c = 2000 psi minimum, or the following:

1 part Portland cement
2 1/2 parts sand
3 1/2 parts 3/4 inch maximum size gravel
Not more than 7 gallons of water per sack of cement.

III. LUMBER

Lumber shall be Douglas Fir / Larch No. 2 or better; all lumber must be grade marked.

IV. POST ANCHORAGE AND BRACING

The details shown on this sheet have been approved by the City of Villa Park Building Department. Posts must be anchored at the lower end by any of the methods noted. They must be braced to the upper end using any of the optional methods shown.

Decorative-type bracing may be substituted for the above if the same amount of structural bracing is realized. When the load on supporting post does not exceed 750 pounds per post, a minimum 3 1/2" thick concrete slab on grade may be substituted for the pad footings shown on the typical framing details. Post anchorage to slabs must be the same as to footings.

V. LEDGER TO HOUSE ATTACHMENT

When it is desired to connect and support one side of the structure by attaching it directly to the house, the rafter spans and main beam sizes will be as shown in the table. However, the main beam may be replaced on the side attached to the house with a ledger the same size as the rafters and fastened to the studs with 3/8" X 5" lag screws spaced at 16" on center. Attachment to existing house rafters is achieved with optional method shown *(See Detail B of Sheet 5)*.

VI. ROOF COVERING

If covered with nominal one-inch roof sheathing, the roof must have rafters spaced not more than 32" center to center. This spacing is the maximum span for 3/4" net sheathing. When used, plastic roof coverings must be installed according to manufacturer's recommendations and the corrugations should be placed perpendicular to and across the supports. The minimum roof slope must be 3/4" in 1 foot

Roof Live Load = 10 psf
Roof Dead Load = 7 psf
All lumber to be Douglas Fir / Larch No. 2 or better.

OWNER: _____

ADDRESS: _____

CITY: _____ **STATE:** _____

ZIP CODE: _____

CITY OF VILLA PARK
BUILDING DEPARTMENT

TYPICAL PATIO COVERS

DIRECTIONS

1. Do not use pencil or red ink.
2. If framing plan is different from shown in this form, use a additional page to show the framing plan.
3. Submit the following:
   a. Three copies of site plan. (Standard form are available)
   b. Three copies of this form. Complete both sides.
   c. A Building Permit application form.

GUIDELINES FOR PATIO CONSTRUCTION

(Choose one that best fits your condition)

- ❑ Single Family
- ❑ Zero lot line
- ❑ Condominium
- ❑ Town House

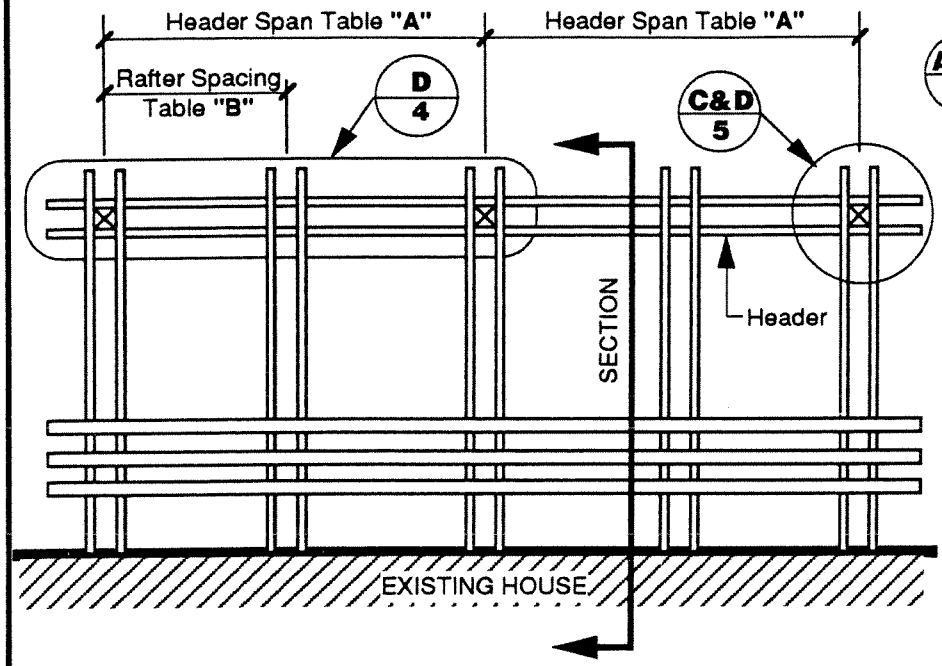

FRAMING PLAN

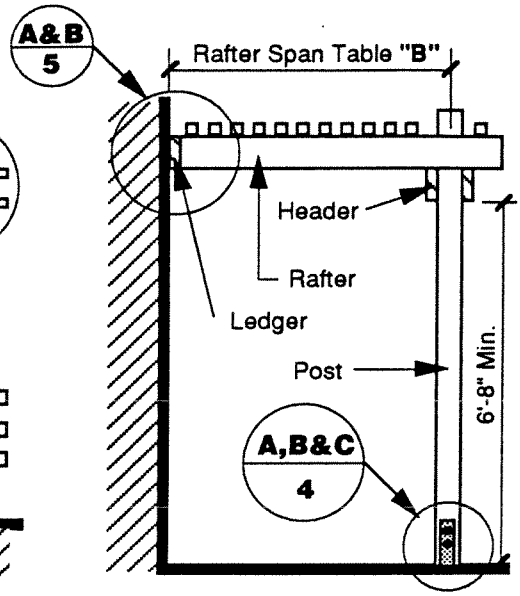

CROSS SECTION

PATIO COVER REQUIREMENTS

1. **HEADER:** Header shall be _____ ❑ Single Header ❑ Double Header
2. **JOISTS:** Joists shall be _____ at _____ on center. ❑ Single Joists ❑ Double Joists
3. **ROOF SHEATHING:** Sheathing shall be _____ self spaced
4. **LEDGER:** Ledger shall be a _____ mounted on existing wall with 3/8" X 5" lag bolts at 16" on center **(See Detail A of Sheet 5)**
5. **FASCIA:** Existing fascias if used as a ledger must be attached to the existing rafters with metal framing anchors on each side of each rafter. **(See Detail B of Sheet 5)**

CITY OF VILLA PARK
BUILDING DEPARTMENT

TYPICAL PATIO COVERS

TABLE: A — MINIMUM HEADER SIZES

Rafter Span	Post Spacing *(See Framing Plan)*							
	6'-0"	8'-0"	10'-0"	12'-0"	14'-0"	16'-0"	18'-0"	20'-0"
4'-0"	4"X4"	4"X4"	4"X4"	4"X4"	4"X4"	4"X4"	4"X4"	4"X4"
6'-0"	4"X4"	4"X4"	4"X4"	4"X4"	4"X4"	4"X4"	4"X4"	4"X4"
8'-0"	4"X4"	4"X4"	4"X4"	4"X6"	4"X6"	4"X6"	4"X6"	4"X6"
10'-0"	4"X6"	4"X6"	4"X6"	4"X6"	4"X6"	4"X6"	4"X8"	4"X8"
12'-0"	4"X6"	4"X6"	4"X8"	4"X8"	4"X8"	4"X8"	4"X8"	4"X8"
14'-0"	4"X8"	4"X8"	4"X8"	4"X8"	4"X10"	4"X10"	4"X10"	4"X10"
16'-0"	4"X8"	4"X8"	4"X10"	4"X10"	4"X10"	4"X10"	4"X10"	4"X10"
18'-0"	4"X10"	4"X10"	4"X10"	4"X10"	4"X12"	4"X12"	4"X12"	4"X12"
20'-0"	4"X10"	4"X10"	4"X12"	4"X12"	4"X12"	4"X12"	4"X14"	4"X14"

TABLE: B — MINIMUM RAFTER SPAN TABLE

Rafter Span	Rafter Spacing *(Center-to-Center)*			
	12"	16"	24"	32"
6'-0"	2"X4"	2"X4"	2"X4"	2"X4"
7'-0"	2"X4"	2"X4"	2"X4"	2"X4"
8'-0"	2"X4"	2"X4"	2"X4"	2"X4"
9'-0"	2"X4"**	2"X4"**	2"X4"**	2"X4"**
10'-0"	2"X4"**	2"X4"**	2"X4"**	2"X6"
11'-0"	2"X4"**	2"X4"**	2"X6"	2"X6"
12'-0"	2"X4"**	2"X6"	2"X6"	2"X6"
13'-0"	2"X6"	2"X6"	2"X6"	2"X6"
14'-0"	2"X6"	2"X6"	2"X6"	2"X8"
15'-0"	2"X6"	2"X6"	2"X6"	2"X8"
16'-0"	2"X6"	2"X6"	2"X8"	2"X8"
17'-0"	2"X6"	2"X6"	2"X8"	2"X8"
18'-0"	2"X6"	2"X6"	2"X8"	2"X10"
19'-0"	2"X8"	2"X8"	2"X8"	2"X10"
20'-0"	2"X8"	2"X8"	2"X8"	2"X10"

TABLE: D — ROOF SHEATHING

2" X 2" Self Space Spans	6'-0"
2" X 4" Self Spaced Spans On Edge	11'-0"

TABLE: C — MINIMUM SQUARE FOOTING SIZES

Post Spacing	Rafter Span *(See Cross Section)*							
	6'-0"	8'-0"	10'-0"	12'-0"	14'-0"	16'-0"	18'-0"	20'-0"
4'-0"	12" sq.*	12" sq.*	12" sq.*	12" sq.*	12" sq.*	12" sq.*	14" sq.	14" sq.
6'-0"	12" sq.*	12" sq.*	14" sq.	14" sq.	14" sq.	16" sq.	16" sq.	16" sq.
8'-0"	14" sq.	14" sq.	14" sq.	16" sq.	16" sq.	18" sq.	18" sq.	20" sq.
10'-0"	14" sq.	16" sq.	16" sq.	18" sq.	18" sq.	20" sq.	20" sq.	22" sq.
12'-0"	16" sq.	16" sq.	18" sq.	20" sq.	20" sq.	22" sq.	22" sq.	24" sq.
14'-0"	16" sq.	18" sq.	20" sq.	20" sq.	22" sq.	22" sq.	24" sq.	24" sq.
16'-0"	18" sq.	20" sq.	20" sq.	22" sq.	24" sq.	24" sq.	27" sq.	27" sq.
18'-0"	20" sq.	20" sq.	22" sq.	24" sq.	24" sq.	27" sq.	27" sq.	30" sq.
20'-0"	20" sq.	22" sq.	24" sq.	24" sq.	27" sq.	27" sq.	30" sq.	30" sq.

Notes:

* See paragraph on post anchorage

** After prolonged periods of time 2"X4" rafters spanning more than 8 feet may deflect permanently and give an objectionable appearance. It is therefore recommended that for rafter spans exceeding 8 feet a minimum rafter size of 2"X6" be used.

CITY OF VILLA PARK
BUILDING DEPARTMENT

TYPICAL PATIO COVERS

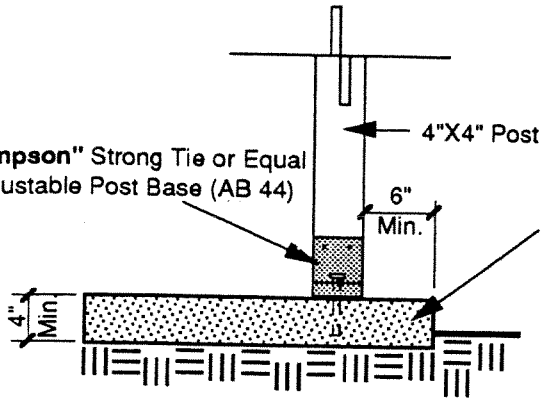

A/4 **SLAB FOOTING**

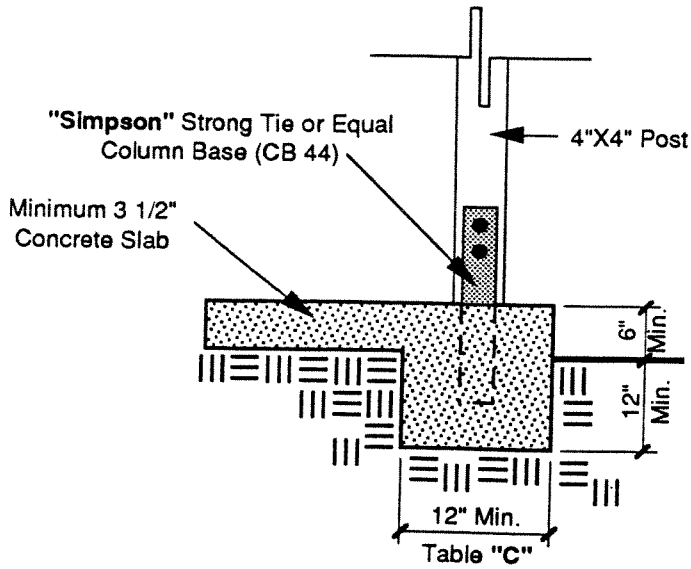

B/4 **PAD FOOTING**

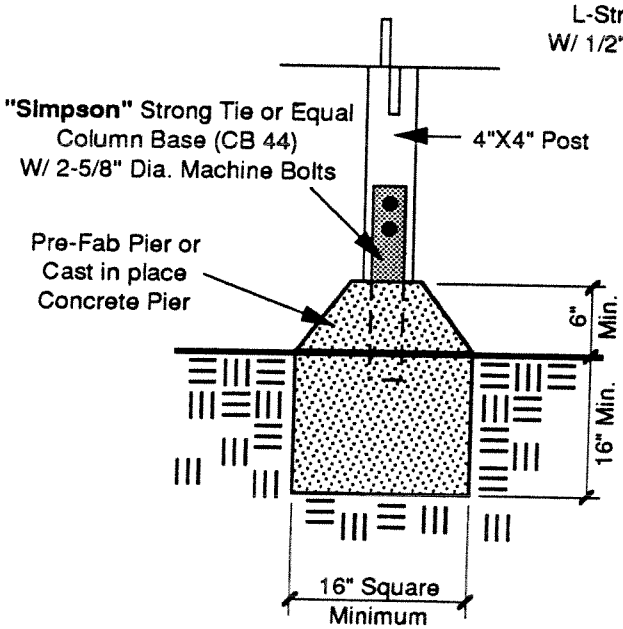

C/4 **PIER FOOTING**

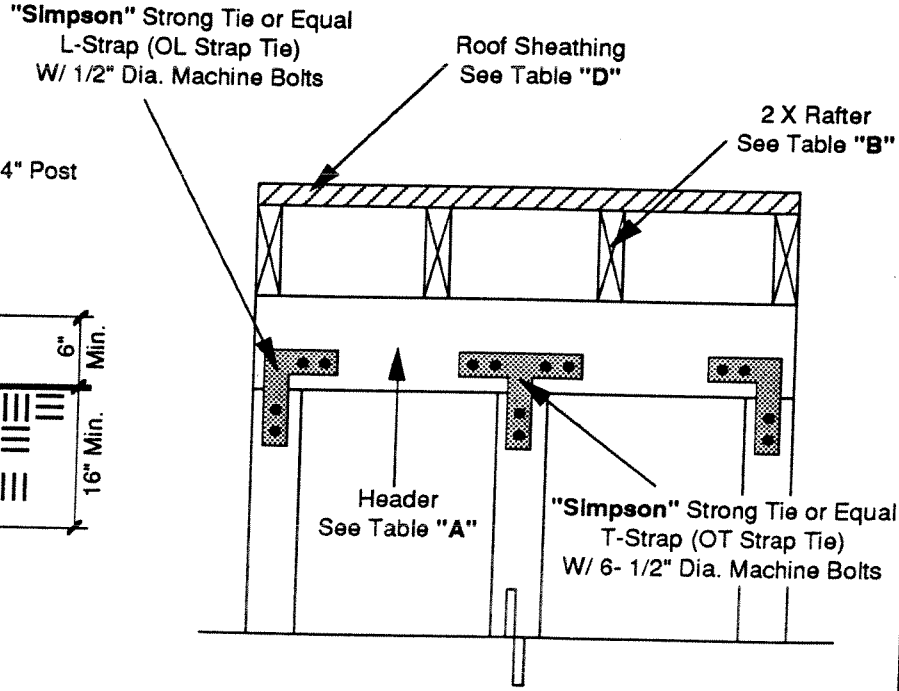

D/4 **HEADER ELEVATION**

CITY OF VILLA PARK
BUILDING DEPARTMENT

TYPICAL PATIO COVERS

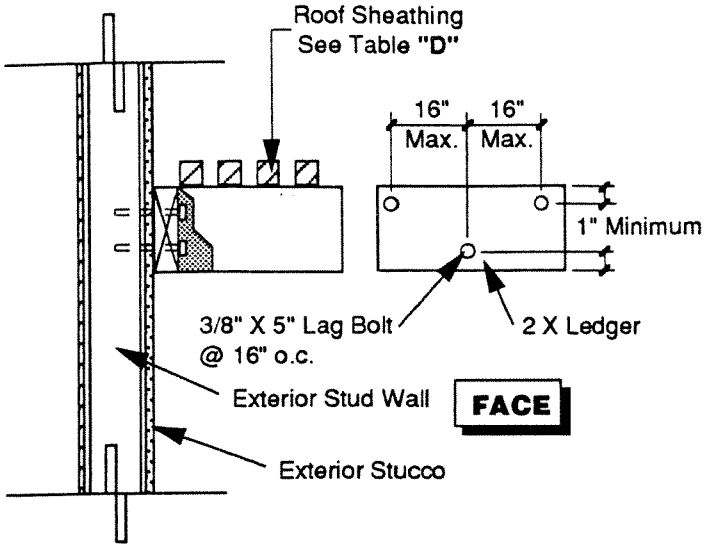

SECTION

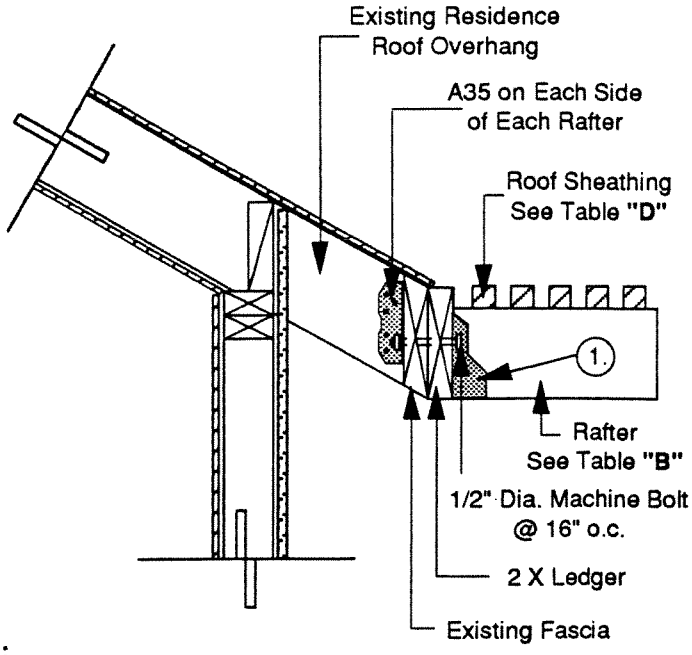

NOTE:

1. **"Simpson"** Strong Tie or Equal Standard Joist Hanger (U 26)

A / 5 LEDGER DETAIL

B / 5 EAVE CONNECTION

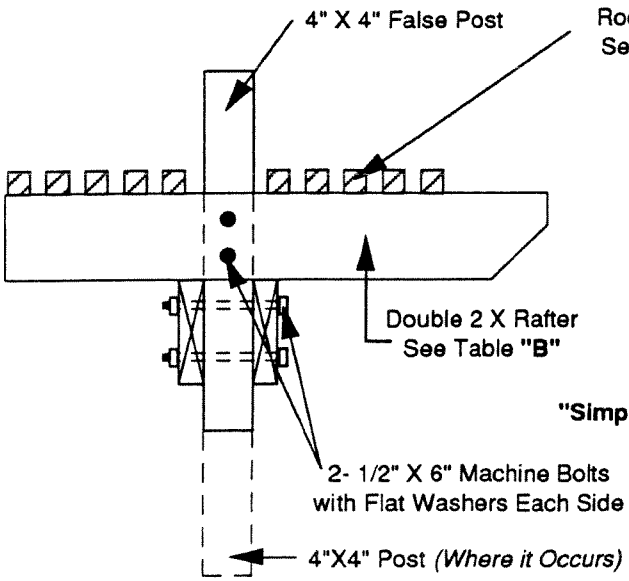

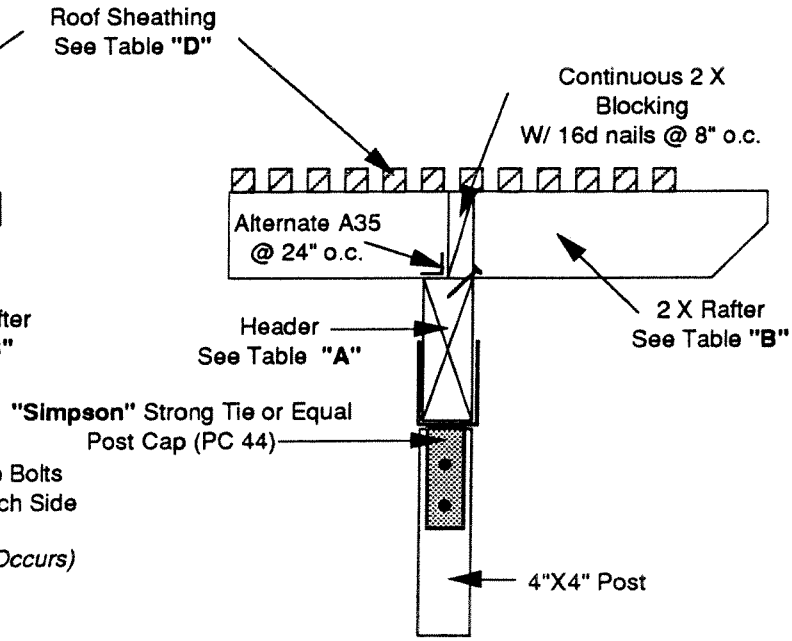

C / 5 HEADER DETAIL

D / 5 HEADER DETAIL